CombiScrubberwith Structured Packing-Innovative H_2S - and NH_3 - Removal & Recovery in One-Fits-All Columns *(used at Coke Plants)*

Introduction

Since the development of recovery type coke oven batteries, all steel makers had an advantage of using surplus coke oven gas (COG) as fuel in their integrated steel plant or in olden days also as city gas. This gas however has impurities that are detrimental to environment. While H2S & NH3are impacting the environment indirectly in terms of NOx and SOx, tar and naphthalene also needs to be recovered from the coke oven gas to avoid choking of pipeline and burners.

The Principle of the Traditional Desulfurization Process

The crude COG coming from coke oven plants is initially treated to remove tar & naphthalene in various units. Subsequently, the COG is passed through a scrubbing system for removal of hydrosulfide (H2S) and ammonia (NH3). If COG as fuel had been burned with this kind of load of H2S and NH3 a tremendous amount of sulfur and nitrogen oxides would have been generated at the stack of the plant. However, these gases are hazardous to the environment and hence, authorities provide permissions to operate a plant only if the operator constantly adhere to the stringent admissible levels for these hazardous impurities.

Therefore, before COG can be used as fuel it has to be treated insidethe gas treatment plant to drive out as much of these impurities as required to meet the individual admissible levels.

Traditional desulfurization plants come with individual columns for removal of H_2S & NH_3. Additionally, there is a stand-by column which can either act as a scrubber for H_2S or NH_3 depending upon the need to shut down the column for maintenance. These columns are usually equipped with expanded metals. However, its surface for supporting the reaction of the gas and a liquid solvent is relatively low compared to the best available technology. As a consequence, the required space of the packing is relatively high to achieve the nowadays admissible, low levels of remaining impurities in the gas. Usually, a serial configuration of two separate columns, both for H2S and NH3 for both removal and recovery is used. This typical configuration is shown hereafter:

Expended Metal Packing Surface: e.g. 50m²/m³

The advanced CombiScrubber-design of tkIS

Modern scrubbing system offered by thyssenkrupp provides columns with 'structured packing' characterized by larger, reactive surface area and hence, higher efficiency. Structured packing isalready used in Indian petroleum & petrochemical industry since few years. However, due to the impurities in COG, the same were not commonly used for scrubbing of H_2S & NH_3. Nevertheless,thyssenkrupp has proven its reliability of combi-scrubber with structured packing including its upstream units like tar removal in many projects worldwide. With this advanced technology, thyssenkrupp is in a position to offer a single scrubbing column for removal of H_2S & NH3 simultaneously. Which means

Mining the thyssenkrupp expertise bank

We bring to you a series of articles written by experts of thyssenkrupp on Coke Ovens and related fields. thyssenkrupp has an illustrious history and association with the coking industry spanning over 150 years, having built in excess of 500 coking plants and installed twice the number of coke oven batteries. thyssenkrupp experts are widely considered the go-to persons when it comes to this segment of the steel industry.

In this issue we bring to you our second an new article that gives information about our Combi Scrubber technology that is used to remove the impurities like hydrogen sulfide (H2S) and ammonia (NH3) from the Coke Oven Gas which is subsequently processed in downstream Claus Plant to make elemental sulphur. Our first article on The Latest Developments on the EnviBATTM Pressure Regulation System was published in the November 2020 issue of Steel and Metallurgy.

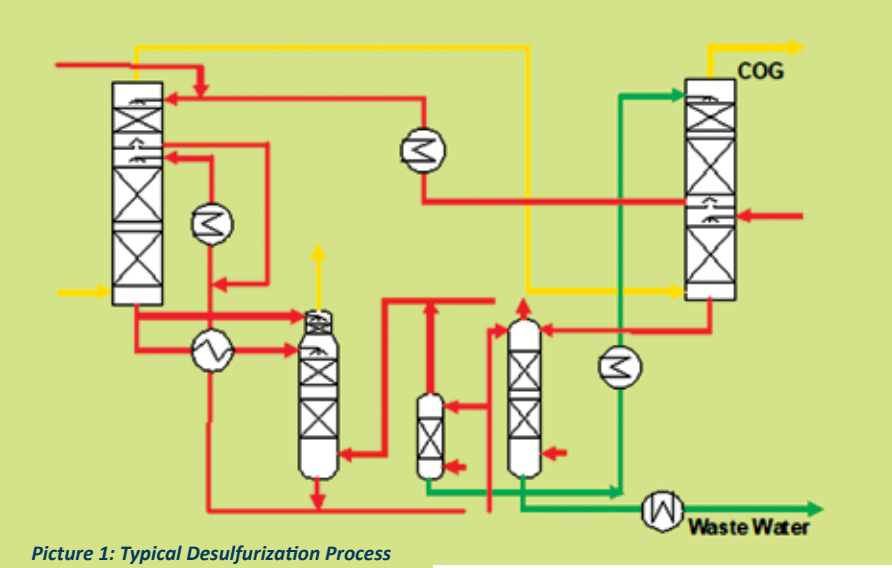

Picture 1: Typical Desulfurization Process (past)

thyssenkrupp is offering 'REAL-TIME COMBISCRUBBER' system.

Thescrubber requires circulating ammonia solution and stripped water and including a final cooling and naphthalene removal stage in only one column. Along with a potential 100% redundancy an admissible level of e.g. less than 200 mg/Nm³ H_2S content in the cleaned COG is easily achievable and has been already proven in various plants worldwide. For further details of please consult the subsequent table.
The principle of this innovative process design for removing H_2S and NH_3 from coke oven gas in only one column can also be applied to the desorber/ stripper unit and is shown for example with tkIS' Cyclasulf ® process hereafter.

Detailed explanation of the process

The coke oven gas leaving the gas exhauster unit enters the naphthalene removal stage of the column. By means of tar based wash oil, naphthalene is removed from the COG in order to allow the lowest possible wash temperature without precipitation of naphthalene.

Next, the COG enters the above located final cooling stage. Here, the heat of compression produced in the gas exhauster unit will be removed. By means of a secondary cooling circulation, the COG is cooled down to a temperature similar to the outlet temperature of the primary gas coolers, before it enters the H_2S scrubbing stage of the column.

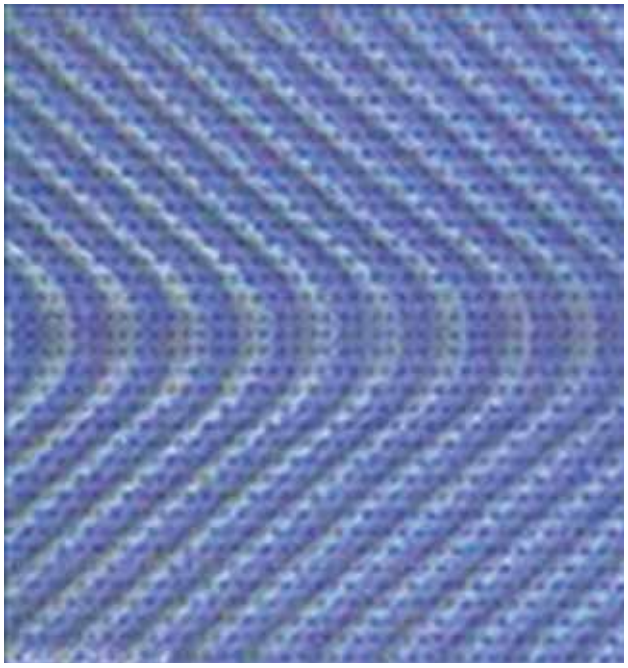

StructuredPacking Surface: e.g. 250m²/m³

H_2S/NH_3 ScrubberUnit

Aqueous rich ammonia liquor from the above located ammonia scrubbing part of the column and deacidified water coming from the desorberunit absorbs the H_2S from the gas. The entire enriched scrubbing water is passed to the H_2S/NH_3desorberunit for regeneration. The excess heat generated during theabsorption of H_2S is removed by an intermediate cooling stage outside of the column.

Subsequently, the coke oven gas enters the above located NH_3 scrubbing stage of the column, where ammonia is removed from the coke oven gas using stripped water from the H_2S/NH_3desorber unit. In the middle part of the NH_3 scrubbing stage a final H_2S scrubbing stage is inserted. In this stage, the H_2S content is adjusted (regulated?) to the required content by using fresh caustic soda solution. After the reaction with H_2S, the used NaOH solution is conveyedto the desorber column to crack fix ammonia components inthe coal water.

H_2S/NH_3 DesorberUnit

The enriched water from the H_2S/NH_3 scrubbing facility is treatedby stripping, using direct steam. In the course of this process, circulating liquors, deacidified water and stripped water are generated. The surplus water composed of coal water and condensed stripping steam will be fed as waste water to the biological waste water treatment plant for cleaning purposes.

The desorber facility comprisesmainly of three sections, a partial condenser, a deacidifier section and a strippersection. The main quantity of cold, enriched water is fed to the partial condenser to control the head temperature. The remaining quantity is pre-heated and charged to

98308 95266

mallcom®

HIGH-FIVE TO A SAFE LIFE.

Introducing **PL010**, Mallcom's foremost high-cut resistant durable palm reinforced knitted gloves.

Featured product is an actual representation of PL010 safety glove

INSIST ON CERTIFIED PPE

SAFETY GLOVE

Salient Key Features:

Seamless knitting construction | Superior ventilation
Ergonomically design | Colour coded overlock binding
correspond to sizes | Cut 3

CE EN 388

Mallcom (India) Ltd.
EN-12, Sector-V, Salt Lake, Kolkata 700 091, India
T: +91 33 4016 1000 | F: +91 33 4016 1010
E: safety@mallcom.in | W: www.mallcom.in

Buy genuine Mallcom safety gear from authorized dealers only. Also available on amazon.in

Typical Constituents of Coke Oven Gas CyclaSulf Desulfurization Plant			
Constituents	COG inlet	COG outlet	
H_2S	8.000	100	mg/Nm3
NH_3	9.000	20	mg/Nm3
HCN	1,5	1,5	g/Nm3
BTX	35	35	g/Nm3
$C_{10}H_8$	200	200	mg/Nm3
Tar	20	20	mg/Nm3

Typical Constituents of Waste Water CyclaSulf Desulfurization Plant			
Constituents	Coal Water inlet	Coal Water Outlet	mg/l
Cod_{cr}		3.500	mg/l
Bod_5		1.700	mg/l
NH_3 Total	5		g/l
NH_3 free	2,5		g/l
NH_3 fix	2,5		g/l
Ammonium Nitrogen		200	mg/l
Total Nitrogen TNB		350	mg/l
H_2S	400	50	mg/l
CO_2	1,2		g/l
HCN+H-SCN	800	100	mg/l
Volotile Phenols	1.8	1	g/l
Total hardness (as CaO)	1		mg/l
Chloride CI		3.000	mg/l
Suspended Solids		100	mg/l
BTX		1	mg/l
PAH		0,05	mg/l
Benzo(a) Pyren		20	µg/l

Table 1: Typical values for In and output

The Advantages of tkIS' smart CombiScrubber® Process vs. the traditional process			
SR.NO	PARAMETER	Traditional Scrubber	Combi-Scrubber
1	No. of Columns	Minimum 3	Maximum 2
2	Space Required	100 %	60%
3	Redundancy	50%	100%
4	Bulk Material (piping, civil, E & I	100 %	60%
5	CAPEX	100 %	60%

Above figures are indicative based on ideal conditions. The same may vary in case to case basis depending on existing set-up, conditions and Client's expectations.

the head of deacidifier section. Together with the reflux from the partial condenser, this water is treated in such way that sour constituents H_2S, CO_2 and HCN are driven out and simultaneously it gets enriched with NH_3. The water is directed in counter-current to the vapors coming from the stripper section.

A well-controlled, partial quantity of the liquorwhich is leaving the deacidifiersection is withdrawn and fed to the scrubber. The remaining liquorflows into the stripping section underneath. Additionally,the coal water and the used,remaining fresh caustic soda solution are addedto the stripping section of the desorber. In the stripper section nearly all constituents, mainly ammonia,being still in the liquorare removedand transferred to the steam. The stripped water leaves the desorber sump and enters the flash drum in order to recover LP-steam by using MP-steam as carryingmedium. A part of the stripped water is used in the scrubber and the surplus is sent to the biological waste water treatment plant. Stripping steam is charged toboth the stripper

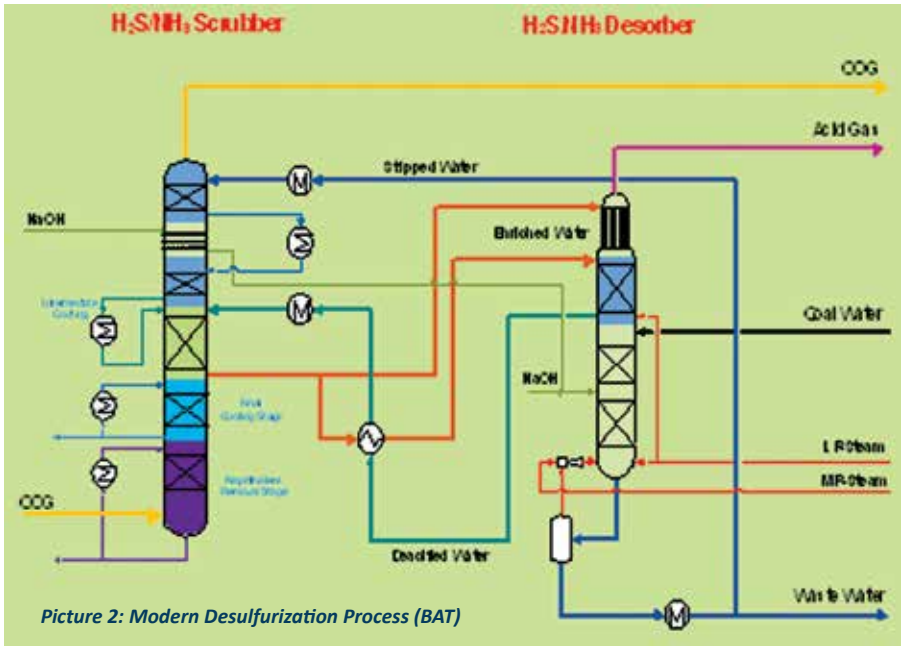

Picture 2: Modern Desulfurization Process (BAT)

DANIELI

REVOLUTIONARY DANIELI MIDA HYBRID MINIMILL

Unique performances using patented

DIGIMELTER®, OCTOCASTER® DYSENCASTER® AND DUE® TECHNOLOGIES

REVOLUTIONARY DANIELI MIDA HYBRID MINIMILL

Unique performances using patented
DIGIMELTER®
OCTOCASTER®
DYSENCASTER®
DUE®

Scrap shredding and cleaning; smart handling (automated scrap yard).

SCRAP MANAGEMENT

20 kWh/ton saving

Lateral and top continuous charging system (ECS).

ENDLESS SCRAP CHARGE

30 kWh/ton saving

11% lower electrode consumption; Zero power grid disturbances.

DDM - DANIELI DIGIMELTER: THE EVOLUTION OF THE EAF

30 kWh/ton saving

DR+DDM PRODUCTION ROUTE

DRI HOT CHARGE

100 kWh/ton saving

HYBRID VIA Q-JENIUS

50 kWh/ton saving

CO_2 reduction: 800 $kgCO_2$/tls DR+DDM route vs. 1,800 $kgCO_2$/tls BF+BOF.

DRI PRODUCTION USING HYDROGEN

Use of alternative power sources at site to Q-One via patented Q-Jenius DC link and Q3-Jenius energy management.

324 $kgCO_2$/tls using up to 70% hydrogen instead of 100% natural gas (without compromising DRI quality).

Note: energy savings expressed in kWh/ton (1 kWh/ton = 3.6 MJ/ton)

— Green Steel technologies for quality products at competive OpEx

DANIELI

Up to 260 kWh/ton saving.

QSP-DUE® Danieli Universal Endless for flat products

DYSENCASTER® UP TO 6.5 M/MIN CASTING SPEED

Q-HEAT FLAT INDUCTION-TEMPERATURE CONTROL

WIDE RANGE OF QUALITY HOT-ROLLED STRIP

DUE® Three rolling modes.
Coil-to-coil, semi-endless, and endless for no steel-grade production limits.

QLP-DUE® Danieli Universal Endless for long products

OCTOCASTER® UP TO 10 M/MIN CASTING SPEED

Q-HEAT LONG INDUCTION-TEMPERATURE CONTROL

BARS, WIREROD, MERCHANT SECTIONS

Up to 330 kWh/ton saving.

DIGISAVER
20 kWh/ton saving

Additional digital overall plant optimization

At Danieli we don't shop around for noble equipment

DANIELI GREEN METAL

Please visit **www.danieli.com** to learn about the orders for the first MIDA Hybrid minimill received from CMC Steel in the USA, and a new 2.5-Mtpy direct reduction plant that allows the use of hydrogen and natural gas, for OMK in Russia.

danieli.com

H_2S/NH_3 ScrubberUnit

H_2S/NH_3 DesorberUnit

and deacidifier section. All vapors pass all sections of the desorber column,are withdrawn from the top of the column at a controlled pressure and,subsequently, fed/ conveyedto the Claus plant.

By use the advanced design with structured packing it is possible to integrate both the H2S and NH3 process for either the scrubbing or the desorption inonly one column. This innovative design offers the benefit of having 50% less footprint at same performance compared to the traditional design. E.g. in case of substitution or revamping of old existing equipment this design offers the client the choice for its new plant layout either to utilize 50% less footprint or, even better, to have 100% redundancy on the same footprint on which the traditional design would need without any redundancy. Usually the traditionaldesign offers only at least 50% redundancy with a 3rdor even 4thcolumn using more footprint.

Further, due to less equipment not only space can be saved but also the capital expenses (CAPEX) are reduced significantly.

So, is everything positive with this new design? We know that there are some companies serving the same market who claims that designs using structural packing have the disadvantage of being subject of severe clogging. We would like to counter this argument with a "yes, but...":

Depending on the performance of the balanced by-product plant it can happen that residuals like tar or naphthalene are not removed properly before entering any H2S/NH3 scrubbing and desorber unit e.g. as consequence of a previous incidence in other areas of the plant. Hence, due to the relative narrow openings insidestructural packing clogging is a potential consequence reducing the efficiency of the process.

But same is valid for a design with expended metal. It just might slightly last longer until the pressure drop rises. Furthermore, using our advanced configuration with 100% redundancy on the same footprint as the traditional design without any redundancy allows the operator to clean the packing regularly from any potential clogging in one column while operate the other column at full capacity without any disturbance of the process. Hence, by doing such in the bounds of a preventive maintenance a third advantage is that the efficiency of the entire H2S/NH3 scrubbing and desorber unit can be continuously kept at the maximum with this advance design.